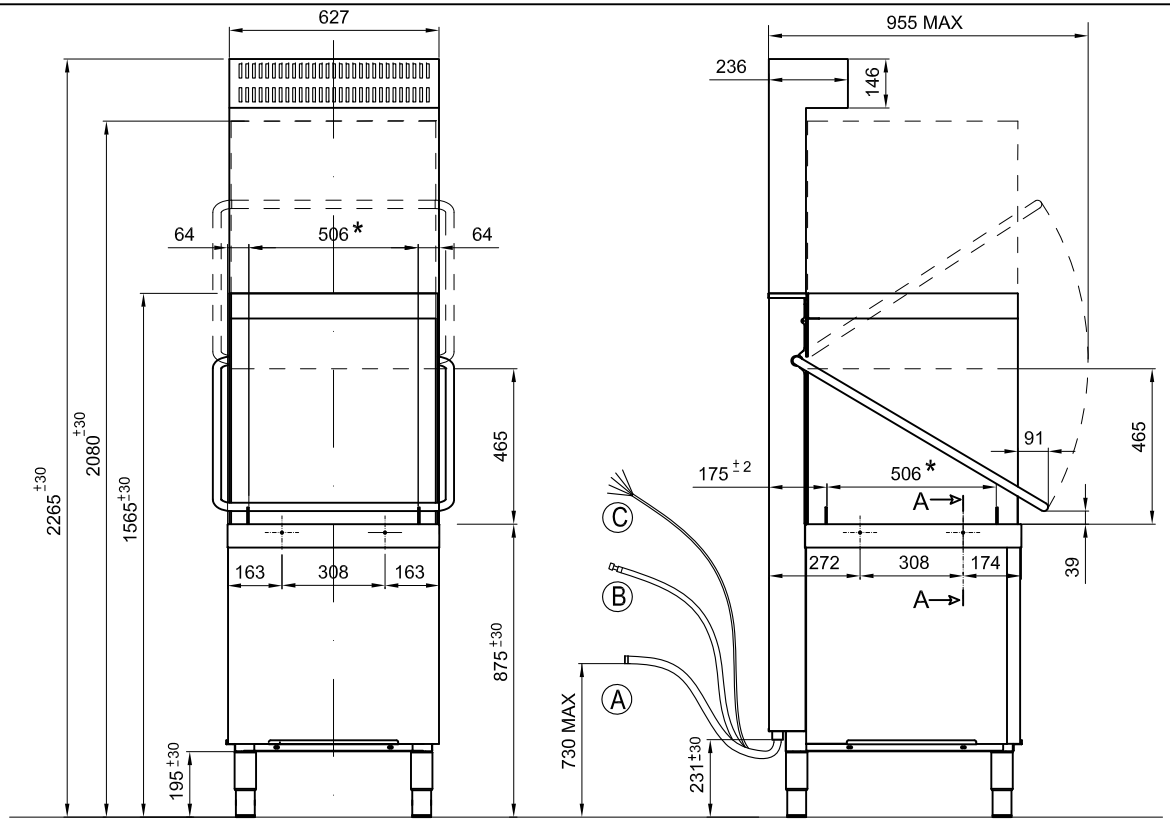

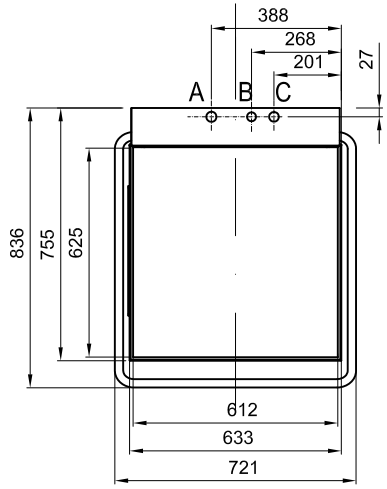

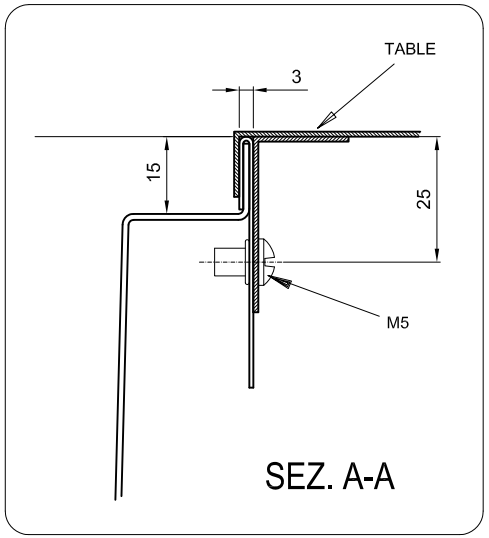

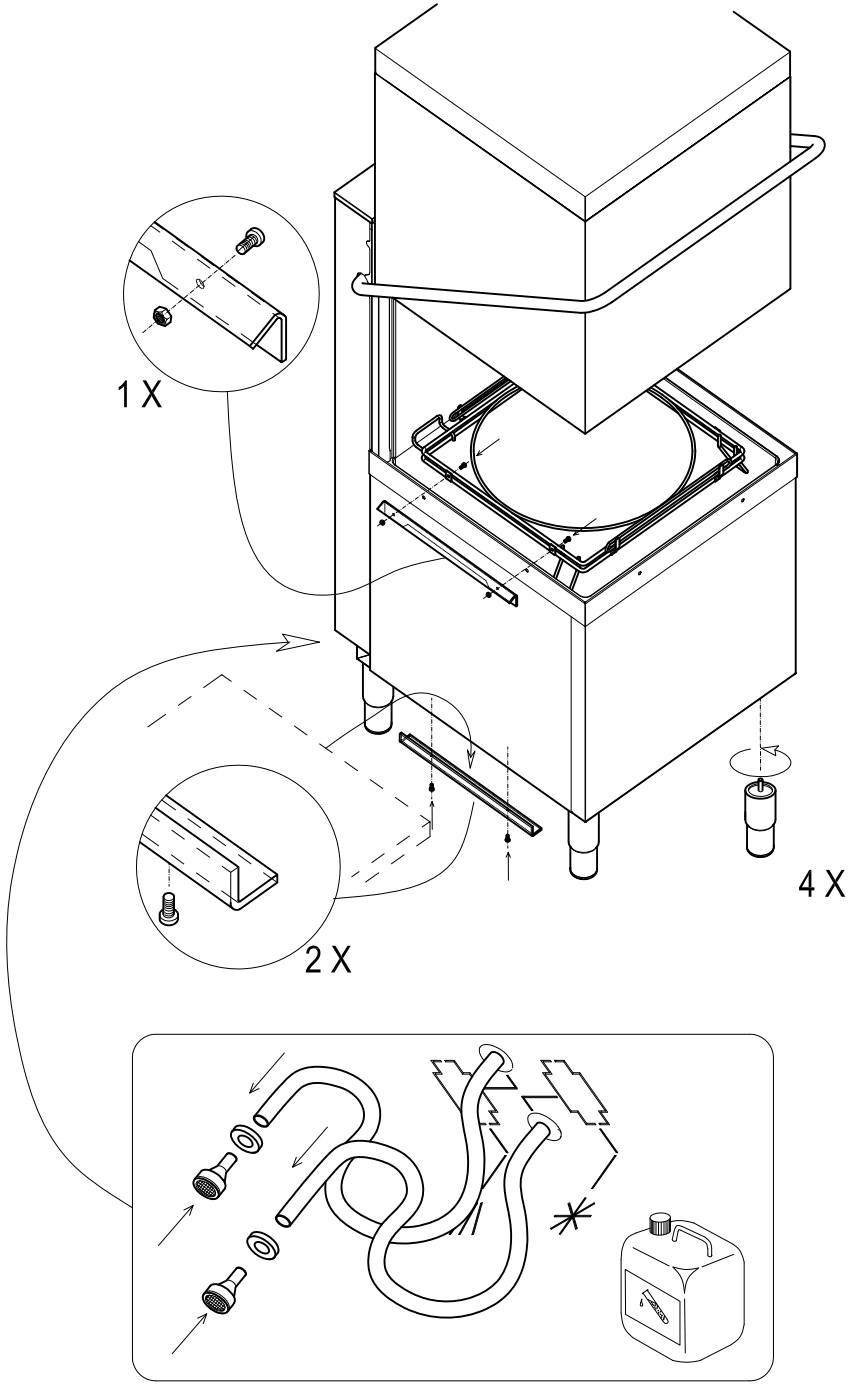

A		⌀ 32 mm
B	10-20°C	G 3/4"
C		Power supply

* LUCE UTILE PER CESTELLO
USEFUL SPACE FOR BASKET
LUMIERE OUTILE POUR PANIER
NUTZBARE OFFNUNG FUR KORBE
ABERTURA UTIL PARA CESTO

Installation layout	Hood type with steam condencer with drain pump	73993	01	
Designed by: M.PUCCI	Date: 03.12.2013	Denomination :	Code :	Rev. :